8" TYPE PS POLE DETAIL

(NOT TO SCALE)

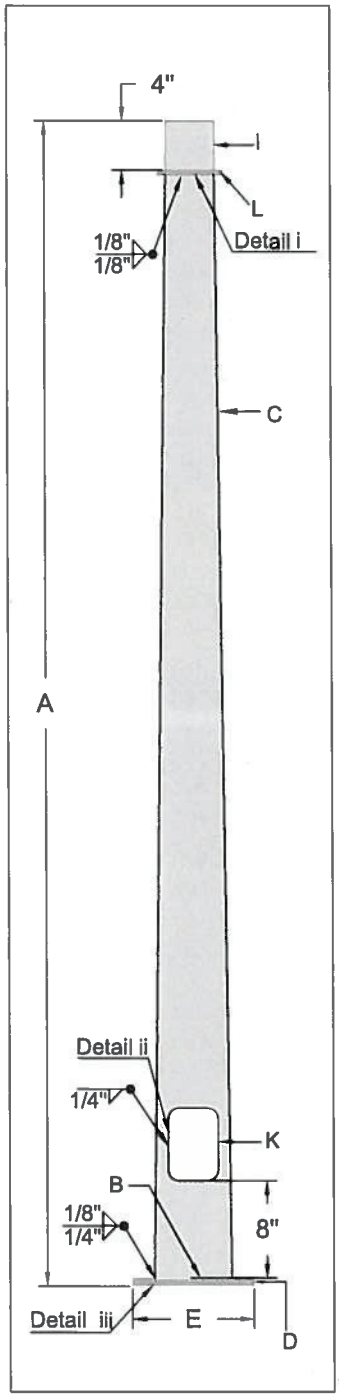

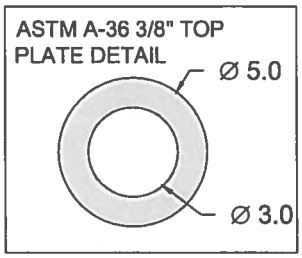

Detail i

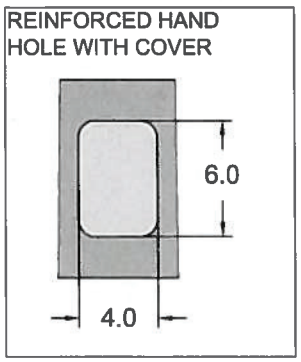

Detail ii

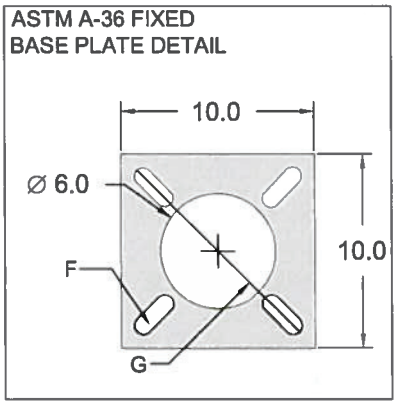

Detail iii

MARK	ITEM	TYPE PS
A	HEIGHT	8'-0"
B	POLE BASE DIA	6"
C	POLE TAPER	0.14/FT
D	PLATE THICKNESS	5/8"
E	PLATE WIDTH	10"x 10"
F	HOLE DIA	1" x 3"
G	BOLT CIRCLE	8"-11"
I	SLIP FITTER	4" I.D.
K	HAND HOLE SIZE	4" x 6"
L	3/8" A36 TOP PLATE	5" OD x 3"ID

ASTM A-595 ROUND TAPERED STEEL POLE SHAFT
ANCHOR BOLTS F1554GR55-GALV
ALL HOT DIP GALVANIZED AFTER FABRICATION PER ASTM A-123
POLE SHOULD BE POWDER COATED AS PER RAL 9005 HAMMER FINISH-JET BLACK

FOUNDATION AS PER WSDOT STD PLAN J-21.10-04

CITY OF RENTON PUBLIC WORKS DEPARTMENT	**8' TYPE PS POLE**	**STD. PLAN – 131** APPROVED: G Z 1/26/15 DATE